# EIGHT-FOOT HIGH TEMPERATURE STRUCTURES TUNNEL

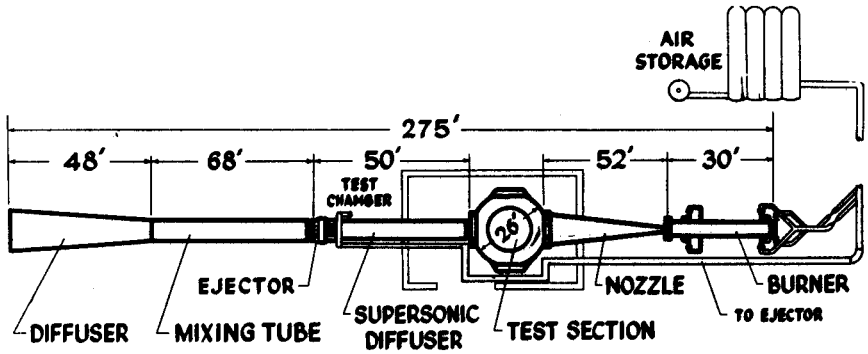


Principle Uses: Studying structures and thermal protection for hypersonic flight.
Model Mounting: Semispan or sting mount

Tunnel Characteristics:

Type of heater: Methane air combustion (oxygen enrichment required for 4500°R.).
Test Medium: Methane-air combustion gases.
Nozzle Type: Axisymetric, fixed geometry.
Data Recording: 100 channels digital recording (Beckman system).

Settling Chamber (Burner)

| | | | | |
|---|---|---|---|---|
| Total pressure, psig: . . . . . | 200 | 200 | 4000 | 4000 |
| Total temperature, °R: . . . . . | 2500 | 4500 | 2500 | 4500 |
| Enthalpy, Btu/lb: . . . . . | 730 | 1400 | 730 | 1400 |

Test Section:

| | | | | |
|---|---|---|---|---|
| Test section size, inch: . . . . | 96D | 96D | 96D | 96D |
| Maximum model dia., inch: | | | | |
| for blunt body: . . . . . | 24 | 24 | 24 | 24 |
| for streamlined body: . . . . | 40 | 40 | 40 | 40 |
| Mach number: . . . . . | 7.7 | 6.8 | 7.7 | 6.8 |
| Dynamic pressure, psf: . . . . | 103.5 | 103.5 | 2075 | 2075 |
| Total pressure behind shock, psia: . | 1.3 | 1.3 | 26 | 26 |
| Reynolds number per foot: . . . | $2 \times 10^5$ | $6 \times 10^4$ | $3.7 \times 10^6$ | $1.5 \times 10^6$ |
| Heating rate to 2 inch diameter hemisphere, Btu/ft$^2$ sec: . . | 24 | 55 | 83 | 183 |

Exhaust: Through diffuser into atmosphere

Status: Activated July 1964

| Cost: | Fiscal Year | C of F | Project No. |
|---|---|---|---|
| | 1959 | $10,040,515 | 2315 |
| | 1960 | 496,435 | 2315 |
| | Total = | $10,536,950 | |

* Total project allotment.