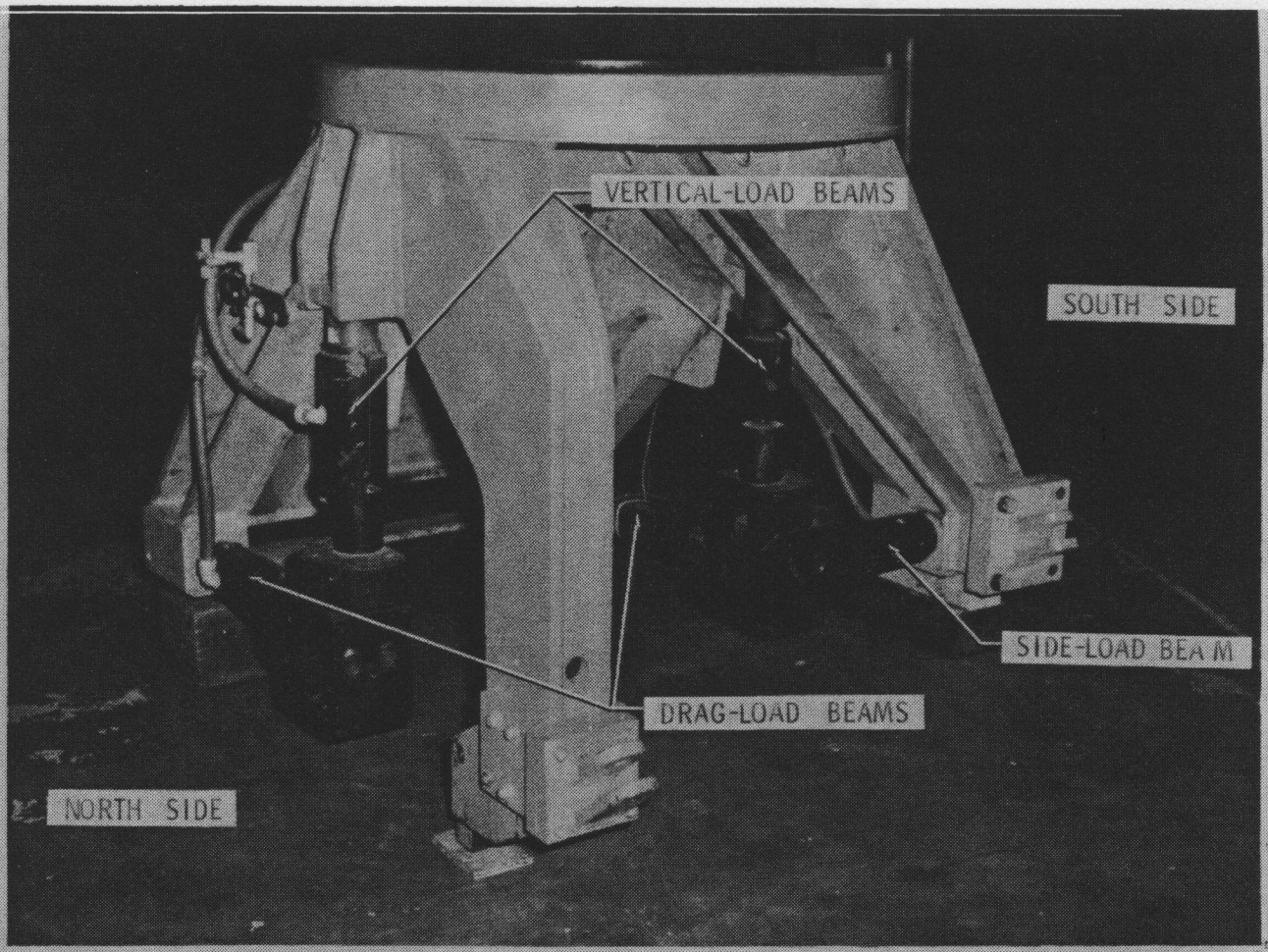

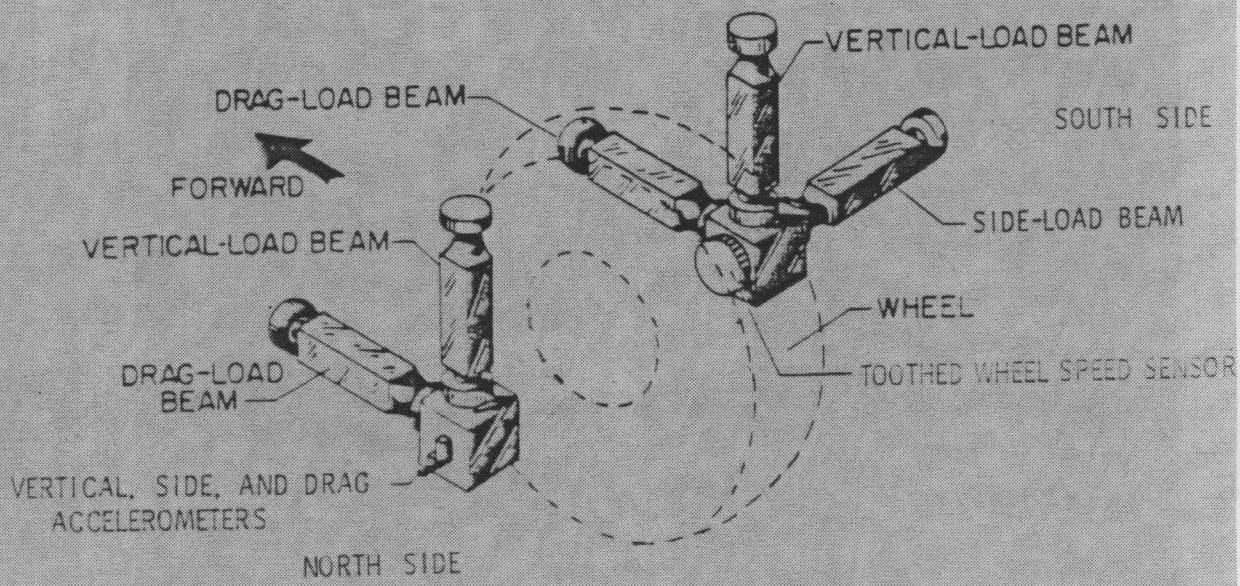

FIGURE 4. - INSTRUMENTED TEST TIRE DYNAMOMETER