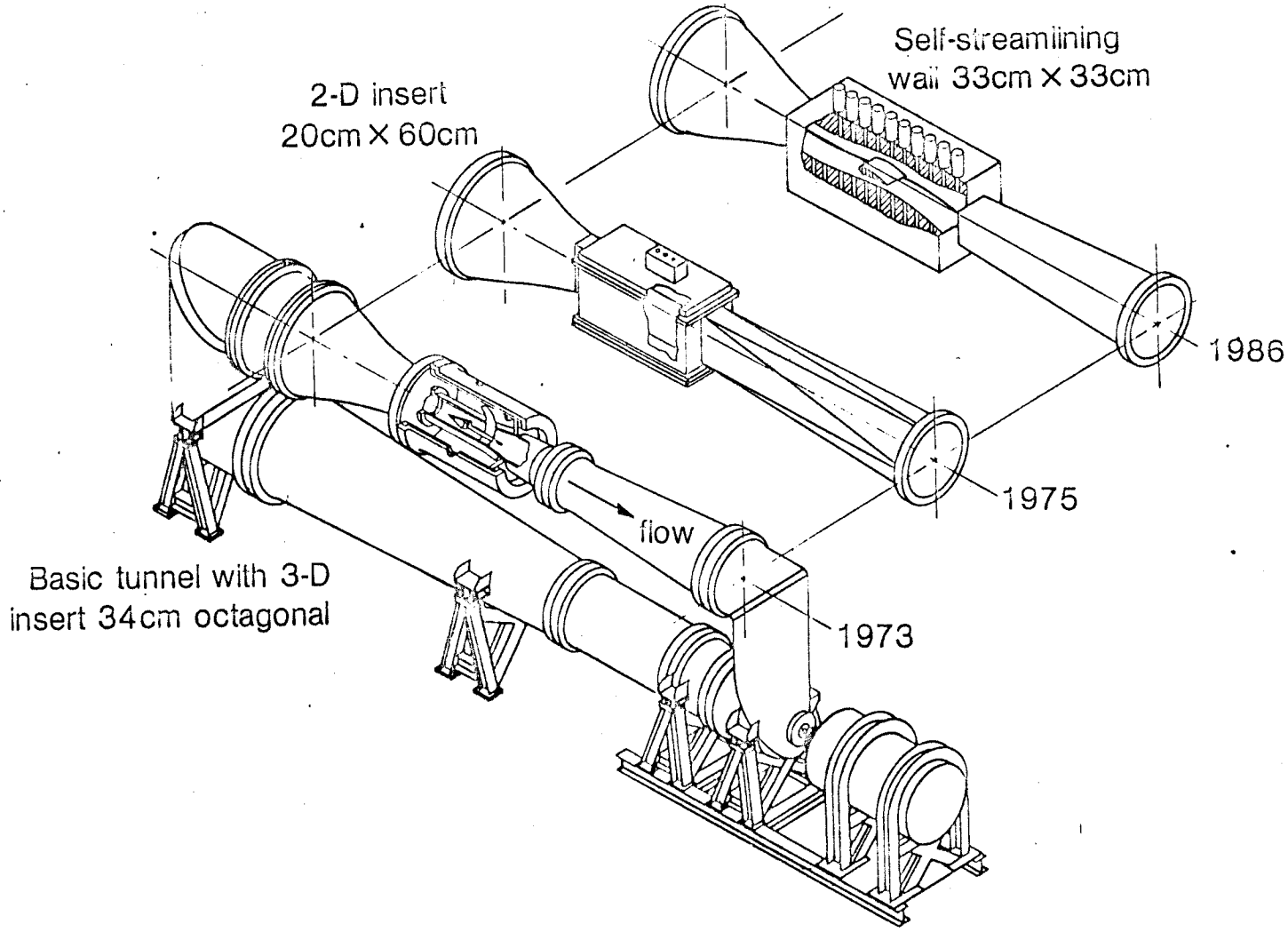EVOLUTION OF THE .3 METER TRANSONIC CRYOGENIC TUNNEL