REPORT No. 412

THE 7 BY 10 FOOT WIND TUNNEL OF THE NATIONAL ADVISORY COMMITTEE FOR AERONAUTICS

By Thomas A. Harris

SUMMARY

This report presents a description of the 7 by 10 foot wind tunnel and associated apparatus of the National Advisory Committee for Aeronautics. Included also are calibration test results and characteristic test data of both static force tests and autorotation tests made in the tunnel.

The tunnel air flow is satisfactory. The velocity, at the model location, is uniform within ±0.2 per cent and the air flow direction is parallel to the axis of the jet within ±0.3°.

The tunnel is equipped with a 6-component indicating balance, on which the three forces and three moments may be measured directly and independently. All tests are made at the same dynamic pressure on models having the same area and aspect ratio. By this arrangement, the results are obtained in coefficient form and very little time is required to reduce the test data.

The balance may also be used for making stable autorotation tests or for measuring the rolling moment due to rolling. In such cases the force-test model support is replaced by one designed for rotation tests.

INTRODUCTION

In 1928 the National Advisory Committee for Aeronautics decided to replace its old 5-foot, closed-throat Venturi wind tunnel (reference 1) by two open-throat, closed-return-passage tunnels which, because of compact design, could be housed in the same building. One of these, the 5-foot vertical tunnel, built primarily for the study of spinning, is described in reference 2. The other, a 7 by 10 foot, rectangular throat tunnel, is described in this report. This tunnel is intended for general aerodynamic tests with particular reference to stability and control.

The balance and operating equipment were designed to facilitate the making of routine force and autorotation tests. The same balance is used for either type of tests, but two easily interchangeable model supports are used. In the force tests all six components are measured directly in coefficient form, each one being independent of the others. The rolling-moment coefficient and the rate of rolling are measured in the rotation tests.

The tunnel was completed in the summer of 1930 and calibration tests were finished during the latter part of the same year. Since then the balance has been installed and the tunnel has been in continuous operation since early in 1931.

DESCRIPTION

THE TUNNEL

The tunnel is shown in sectional plan and elevation in Figure 1. It has an open jet, an open test chamber, and a closed return passage. The direction of the air flow is indicated on the drawing. The air is drawn through the test section by means of a propeller fan in the exit cone, and passes by way of the return passage and entrance cone back to the test section. The area of the exit cone and return passage is increased so that the velocity of the air is gradually decreased at the large end of the entrance cone to about one-fourth of that through the test section.

The tunnel passages are constructed of ⅛-inch sheet steel, stiffened with steel angles and supported by a steel superstructure. The over-all dimensions are shown on the drawing.

Test section.—The air stream at the test section is open to the room in which the tunnel is housed. The space under the air stream and on one side is used for the balance, most of which is in a pit. The control for the propeller-drive motor and a dynamic pressure indicator are located on the same side of the jet as the balance.

Entrance cone.—The sides of the entrance cone were first made of the form designated 1–1 in Figure 1. Preliminary surveys showed a converging air stream which was corrected by changing the sides of the entrance cone to the form 2–2. In the large end of the entrance cone are four reference static-pressure orifices J.

Exit cone.—The upstream end of the exit cone is of the same size as the downstream end of the entrance cone, the spillage air being allowed to pass outside the cone. Seven feet downstream from the mouth of the exit cone are 16 openings for the purpose of reducing the air pulsations, as explained in reference 3.

Guide vanes.—All the guide vanes have the same profile. The upper and lower curvatures of each vane are arcs of circles, the nose is formed by a third arc, and the trailing edge is sharp. The vanes were first spaced regularly in all four corners. After the first dynamic pressure surveys had been made, certain vanes were removed from the No. 1 and the No. 2 corners in order to obtain a more uniform dynamic pressure at the test section.

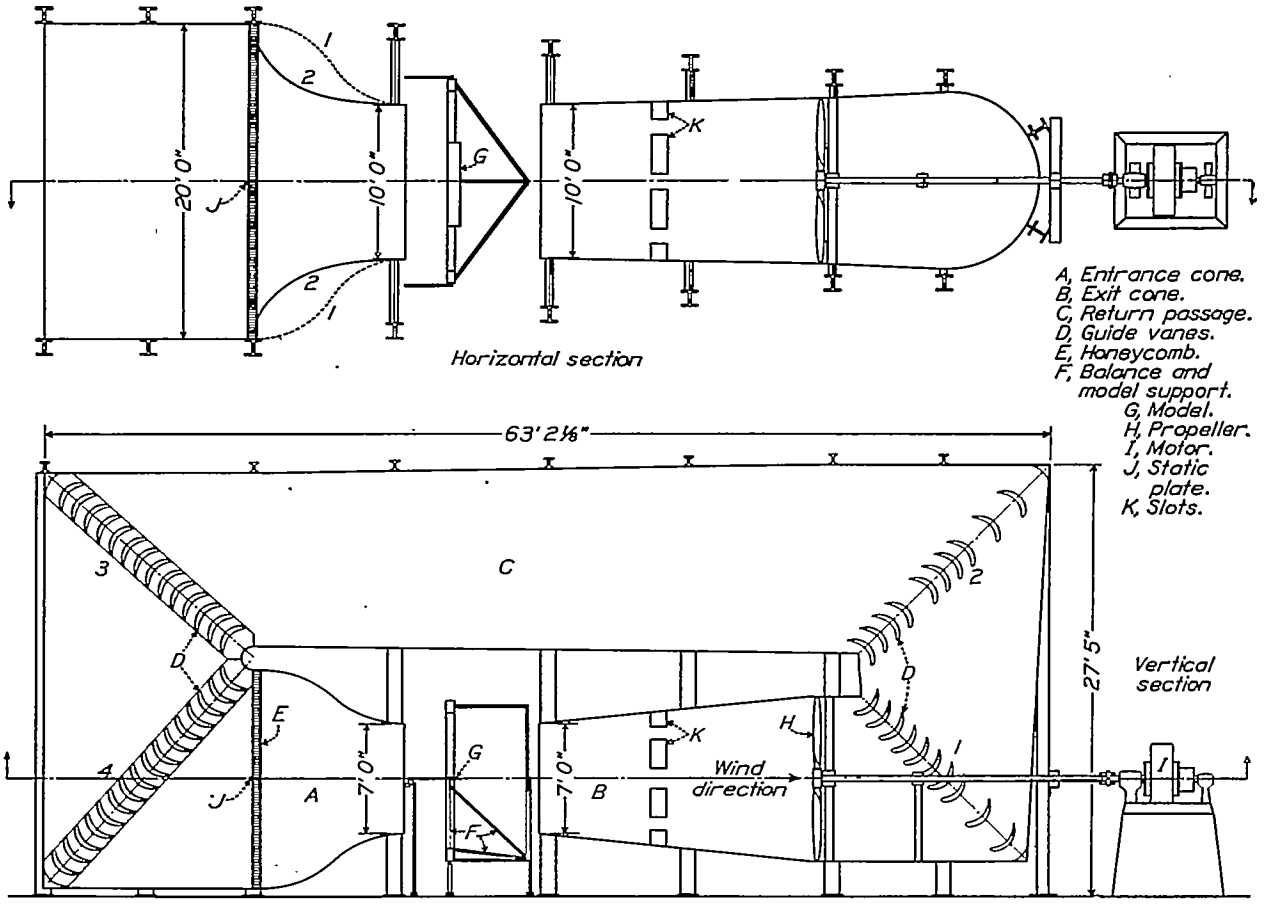

FIGURE 1.—Diagram of the tunnel

Honeycomb.—A honeycomb is placed ahead of the entrance cone (fig. 1) to straighten the air stream before it enters the entrance cone. The cells of the honeycomb are 1 inch square and 6 inches deep.

Uniform dynamic pressure throughout the cross section of the jet at the model test position is obtained by wire screens placed on the outer portions of the upstream face of the honeycomb. These screens were adjusted until a satisfactorily uniform dynamic pressure was obtained.

ASSOCIATED APPARATUS

Propeller and motor.—The fan is a 6-blade, adjustable-pitch propeller 10 feet 6 inches in diameter. It is driven by a 200-horsepower, direct-current motor to which it is directly coupled. The motor speed is controlled by suitable armature and field rheostats. With this propeller-motor combination air speeds from 0 to 80 miles per hour may be obtained.

Dynamic pressure control and indicator.—The dynamic pressure is held constant with time by means of a manometric balance which controls the operation of a field resistance of the propeller-drive motor. A diagram of this apparatus is shown in Figure 2. At-

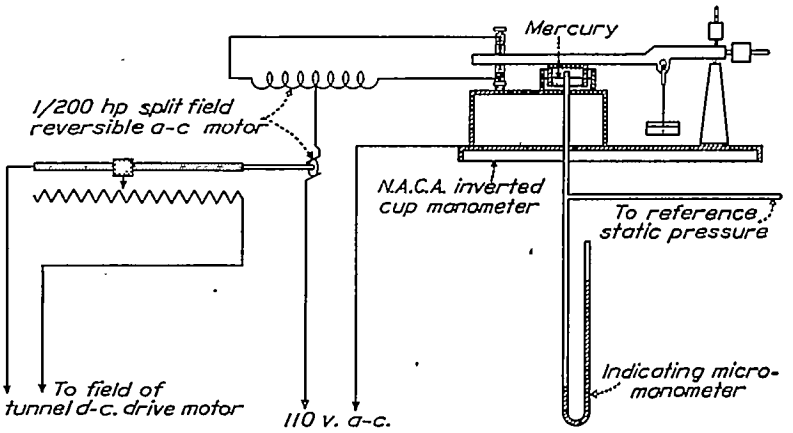

FIGURE 2.—Dynamic pressure-control apparatus

tached to the beam of the manometric balance is an inverted cup partly immersed in a small tank of mercury. The static reference pressure of the tunnel is connected to the space under the cup and is balanced against a given weight on the balance beam. The balance beam is connected to one side of a 110-volt supply line; the other side of the line is connected through a small split-field motor to two contacts between which the balance beam moves. Thus, when the static reference pressure changes the circuit through the motor is closed. This motor operates a fine variable resistance in the field of the propeller-drive motor. The apparatus will hold the dynamic pressure constant to within ±0.2 per cent.

Coupled in parallel with the pressure line of the manometric balance is an N. A. C. A. micromanometer on which the static reference pressure is indicated at all times.

Balance.—A special 6-component balance was designed and constructed for the study, in this tunnel, of stability and control. This balance is shown diagrammatically in Figure 3. The six components are indicated, directly and independently on dials, as coefficients with respect to the wind axes of the model. The balance is so arranged that either static or rotation tests may be made by simply changing the model support. For the most rapid and efficient operation, three observers are required, although the tests can be made with the same accuracy by a single operator.

The balance (fig. 3) consists of a rigid floating framework A, to which the model is rigidly secured, connected by suitable linkages to six scales. These linkages are so arranged that the forces and moments are measured independently with respect to three mutually perpendicular axes intersecting at a point on the jet center line. One of the axes coincides with the center line of the jet; the other two are, respectively, vertical and horizontal.

The floating framework is supported by three vertical members B, C, and D, pivoted on self-aligning ball bearings in the horizontal plane passing through the jet center line. These vertical members are also pivoted on self-aligning ball bearings at the bottom, which allow the framework to move in any horizontal direction. The vertical member D is pivoted, in the vertical plane through the jet center line, to a small scale C_m on which the pitching moment is measured. The two members B and C, on either side of the framework, which are equidistant from and parallel to the vertical plane through the jet center line, are pivoted to each end of a truss E which in turn is pivoted to rotate about its center. Under one side of this truss a small scale C_l is pivoted on which any difference of the force on the two vertical members is measured as a rolling moment. The pivot support of the truss, the pitching-moment scale, and the rolling-moment scale all are mounted on the platform F of a large scale on which the total vertical force or lift is measured. This force is indicated on dial C_L.

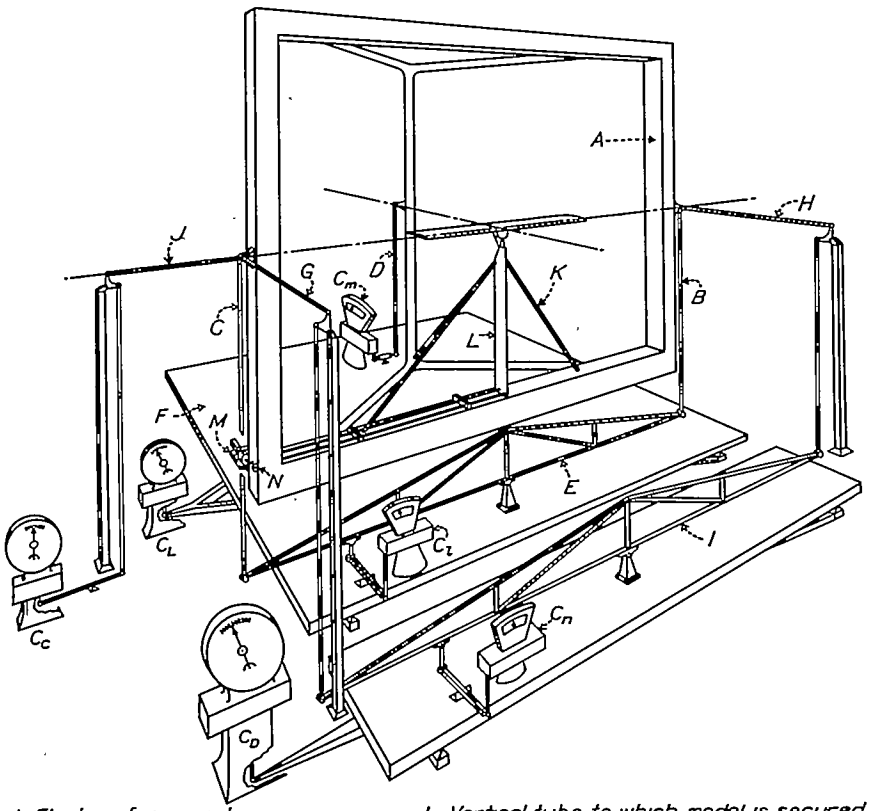

A, Floating framework
B, C, Lift and rolling moment members.
D, Lift and pitching moment member
E, Lift and rolling moment truss.
F, Lift scale platform.
G, H, Drag and yawing moment members.
I, Drag and yawing moment truss.
J, Side drag member.
K, Tripod for supporting model.
L, Vertical tube to which model is secured.
M, Motor for changing angle of attack.
N, Handwheel for changing angle of yaw.
C_L, Lift scale head.
C_D, Drag scale head.
C_C, Cross wind force scale head.
C_m, Pitching moment scale head.
C_l, Rolling moment scale head.
C_n, Yawing moment scale head.

FIGURE 3.—Diagram of the 6-component balance

The drag is transmitted to bell cranks by means of two members G and H in the horizontal plane of and parallel to the jet center line, and pivoted to the framework by self-aligning ball bearings. The force is transmitted through the bell cranks vertically to a truss I from which the drag and the yawing moment

are measured on scales C_D and C_n, respectively, in the same manner as the lift and the rolling moment.

The cross-wind force is taken by a third member J in the horizontal plane of and perpendicular to the jet center line, and is pivoted to the framework on the center line of the bearings on the side of the framework. The force is transmitted vertically through a bell crank to the platform of the cross-wind force scale C_C.

The scale heads and platforms used in the balance are of commercial design. The scales are special in that they all have platform deflections of less than 0.01 inch. (The misalignment caused by this small deflection will not introduce an appreciable error in the results) The indicating dials of the scales are especially graduated and special weights are used that make it possible to measure directly the coefficients about the wind axes of the model. These coefficients are based on the dynamic pressure corresponding to a wind velocity of 80 miles per hour under standard atmospheric conditions, and on a model with an area of 600 square inches and an aspect ratio of 6. If a model of different area or aspect ratio is used, or if tests are made at a different dynamic pressure, a correction factor must be used for reducing the data to coefficients.

All pivot points in the balance, other than those in the scale heads and platforms, are self-aligning ball bearings. They have the advantage of transmitting forces in more than one direction. In the complete balance assembly 32 ball bearings were used, whereas if knife edges had been used 76 would have been required.

The floating framework and the scale platforms are enclosed in fairings to eliminate balance windage.

The lift, drag, cross-wind force, and pitching-moment scales, will indicate the respective coefficients C_L, C_D, C_C, and C_m to within ± 0.001. The minimum value of c_D may be determined to within ± 0.0005 owing to the steady conditions of this test. Rolling and yawing moment coefficients C_l and C_n may be measured to within ± 0.0001.

FIGURE 4.—Force-test set-up in tunnel

Force-test model support.—The force-test model support (fig. 3) consists of a tripod K which is secured to the floating framework. A vertical tube L extends from the bottom of the framework through the center of the tripod. The model is secured to the upper end of this tube by a bracket. The model is so located with respect to the balance that a point on the chord one-quarter of the chord behind the leading edge at

midspan coincides with the origin of the three moment axes of the balance. The angle of attack is changed by a small electric motor M on the floating framework. An angle-of-attack range from $-30°$ to $+70°$ may be obtained with this arrangement. The angle of attack is indicated by a calibrated revolution counter.

The angle of yaw, or sideslip, is changed by rotating the vertical tube to which the model is attached. The tube is geared to a shaft with a handwheel N for changing the angle of yaw. In the yawed condition the angle of attack as measured is the angle in the plane of symmetry between the chord of the wing and the horizontal. Both the angle of attack and the angle of yaw may be changed while the tunnel is running.

The model support is completely inclosed in a streamline fairing, except for the bracket to which the model is attached and a small pivoted strut for changing the angle of attack. (Fig. 4.)

Rotation-test model support.—The balance may be used as an autorotation dynamometer by mounting a wing-rotating device (fig. 5) on the framework in place of the force-test model support. The mountings of both the rotating device and the force-test spindle are easily interchangeable; the change requires about two hours' time.

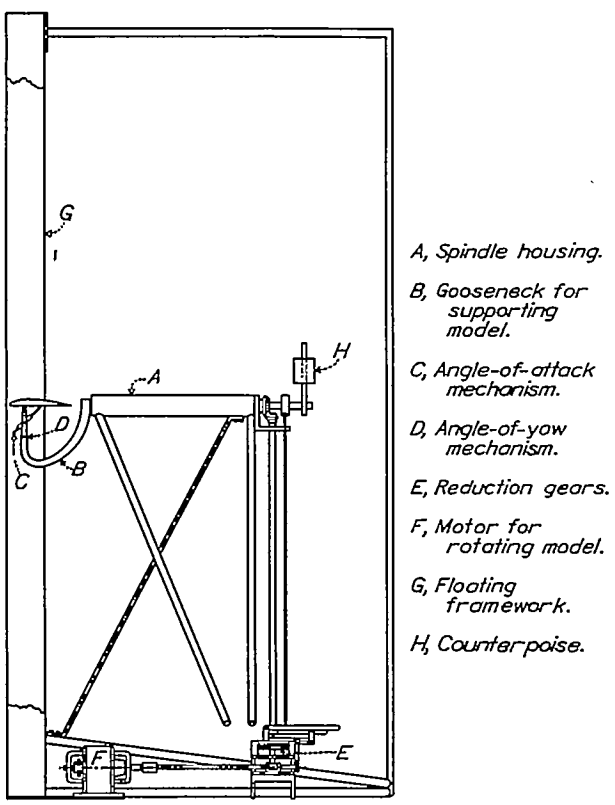

FIGURE 5.—Rotation-test model support

The rotation-test model support (fig. 5) consists of a horizontal spindle supported in a housing A on the jet center line. A gooseneck B, on which the model wing is mounted, is fastened to the forward end of the spindle. This gooseneck is statically balanced by counterpoise H which is secured to the opposite end of the spindle. The mechanisms C and D for changing the angles of attack and yaw are incorporated in the gooseneck.

The spindle is rotated through reduction gearing E by motor F. The gearing is so arranged that it may be engaged for rotating the spindle at a desired rate or disengaged for stable autorotation tests. In the forced rotation tests the torque is measured dircetly as a rolling moment coefficient on the balance rolling-moment scale. If desired, the drag may be also measured while the model is rotating.

The rotation device is enclosed in a streamline fairing except for the tube A, gooseneck B, and counterpoise H. Figure 6 is a photograph of the balance with the autorotation device in place.

SURVEYS AND CALIBRATIONS

In the calibration of the tunnel, dynamic pressure and air stream angularity surveys were made at the model location, 2 feet 10 inches downstream from the entrance cone. Seventy measurements of the dynamic pressure were made at points equally distributed over a vertical plane perpendicular to the air stream at the test model location. The surveys of the tunnel in its final form showed a maximum variation of ± 0.4 per cent in dynamic pressure at the test model location. The angularity of the air stream measured at the same points showed the maximum variation in pitch and yaw to be $\pm 0.3°$. There is no definite twist in the air stream.

A static pressure survey was next made along the jet center line at 1-foot intervals between the entrance and exit cones. The survey showed a gradual decrease in static pressure as the air moves downstream. The difference in the static pressure across the standard model chord length, 10 inches, was found to be 1.8 per cent of the dynamic pressure.

The reference dynamic pressure at the model location is the integrated mean dynamic pressure over the area covered by the span of the model but with the model removed. The static pressure as obtained from the four openings just ahead of the entrance cone was calibrated against the reference dynamic pressure over the entire speed range of the tunnel. This calibrated static pressure is the static reference pressure used to operate the tunnel at any desired dynamic pressure.

Energy ratio tests were made over the entire speed range of the tunnel. The energy ratio is defined as the ratio of the kinetic energy per second of the air flowing through the jet to the electrical energy input per second to the motor. The energy ratio of the tunnel is 1.41 at a tunnel air speed of 80 miles per hour.

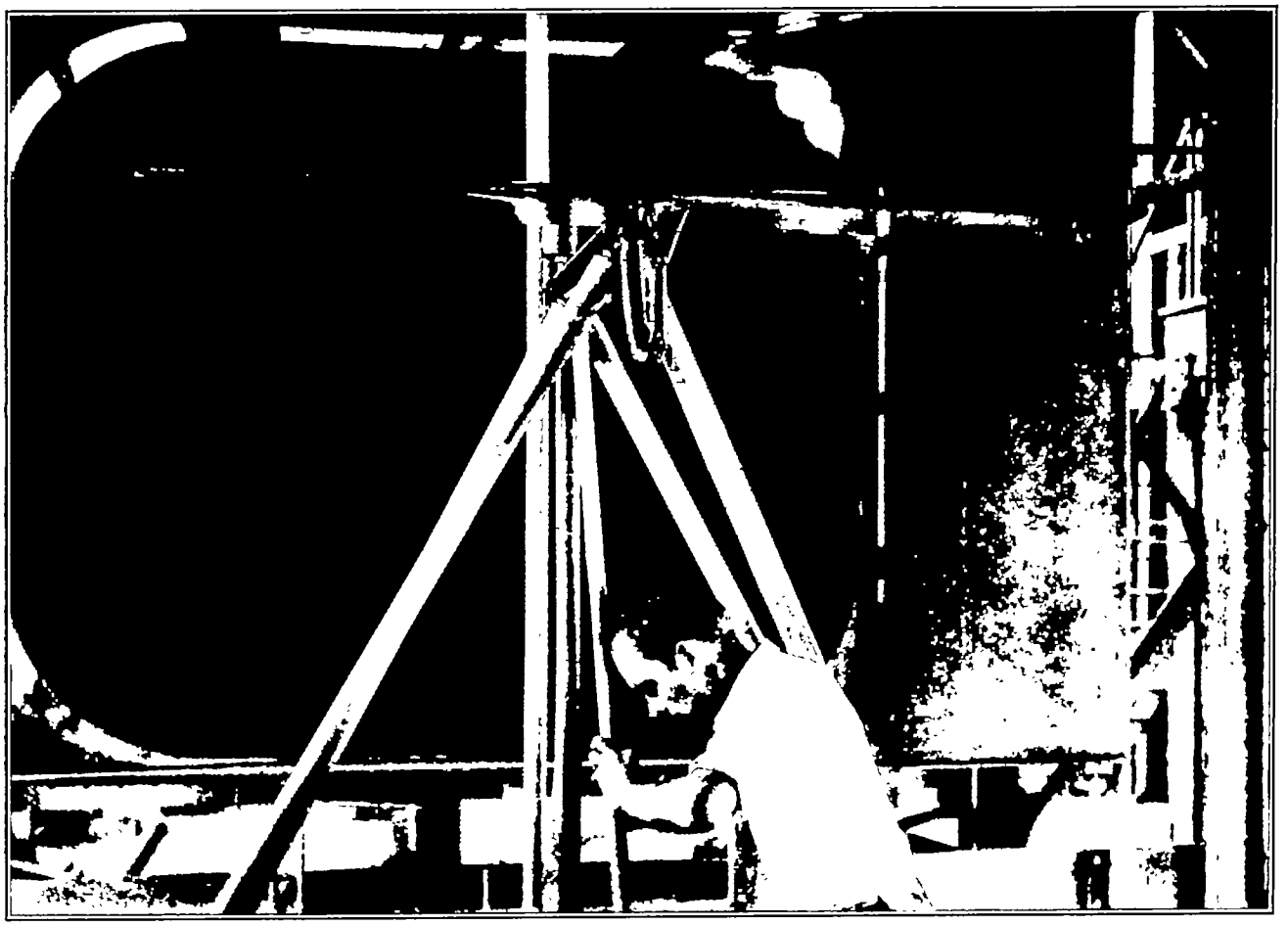

FIGURE 6.—Autorotation-test set-up in tunnel

Force tests were then made to determine the forces acting on the supports. These tests were made with the model supported independently of and in the same position that it normally occupies with respect to the balance. The support forces and moments were found to be small (the support drag was about one-third of the minimum drag of the Clark Y airfoil) and constant for all angles of attack. To eliminate a computation they are compensated for by setting the zero readings of the scales off zero by the proper amounts.

Finally, air flow alignment tests made with the model first in the erect and then the inverted test position show that the air stream has an angle of 13′ upflow at the model location. A correction to the measured drag is necessary because of this misalignment and is applied as explained in reference 4.

CHARACTERISTIC TEST DATA

In Figure 7 the curves of the coefficients of lift, drag, cross-wind force, and pitching moment have been plotted for the range of angles of attack from −10° to +60°. The test model used was a Clark Y airfoil with a 10-inch chord and a 60-inch span, and the model

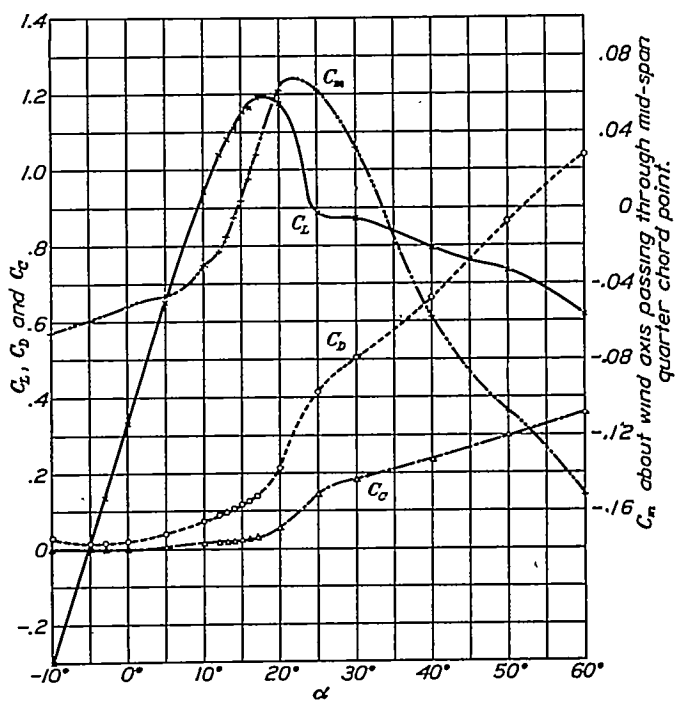

FIGURE 7.—The variation of lift, drag, cross-wind force, and pitching-moment coefficients with angle of attack; 7 by 10 foot wind tunnel, force test, 10 by 60 inch rectangular Clark Y airfoil, yaw=20°

was set at 20° positive yaw. The rolling and yawing moment coefficients were determined for the same test conditions and are plotted in Figure 8.

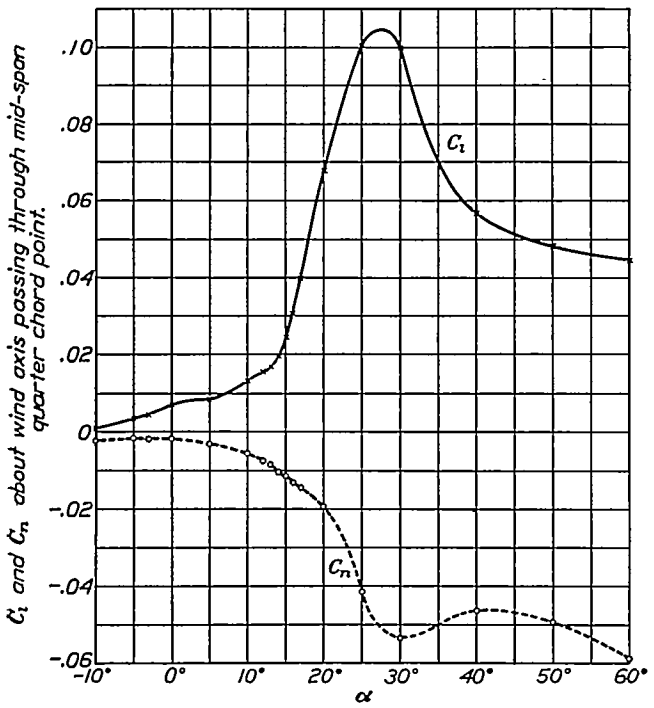

FIGURE 8.—The variation of rolling and yawing moment coefficients with angle of attack; 7 by 10 foot wind tunnel, force test, 10 by 60 inch rectangular Clark Y airfoil, yaw=20°

In Figure 9 the stable autorotation characteristics are shown for the same airfoil at 0° yaw. The rolling

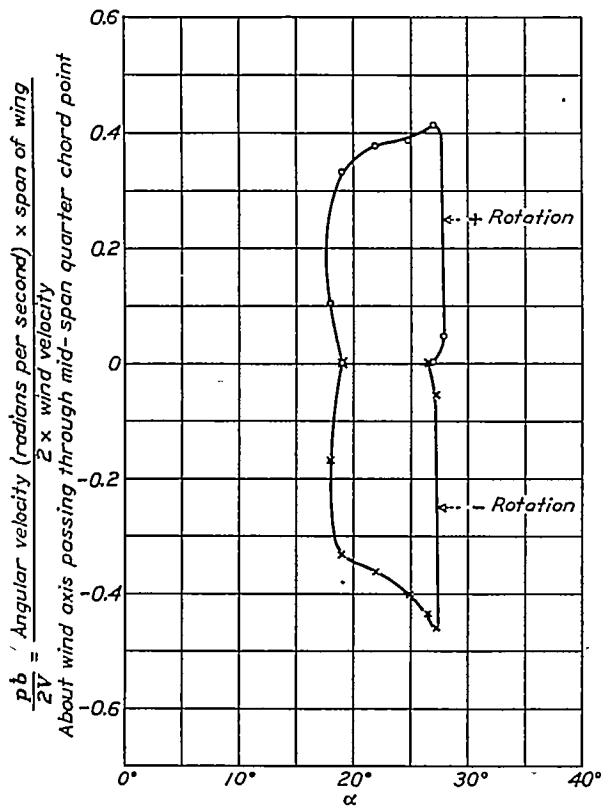

FIGURE 9.—The variation of rate of rotation with angle of attack; 7 by 10 foot wind tunnel, rotation tests, 10 by 60 inch rectangular Clark Y airfoil, yaw=0°

moments due to roll at a constant rate of rotation for the same airfoil at 0° yaw are shown in Figure 10.

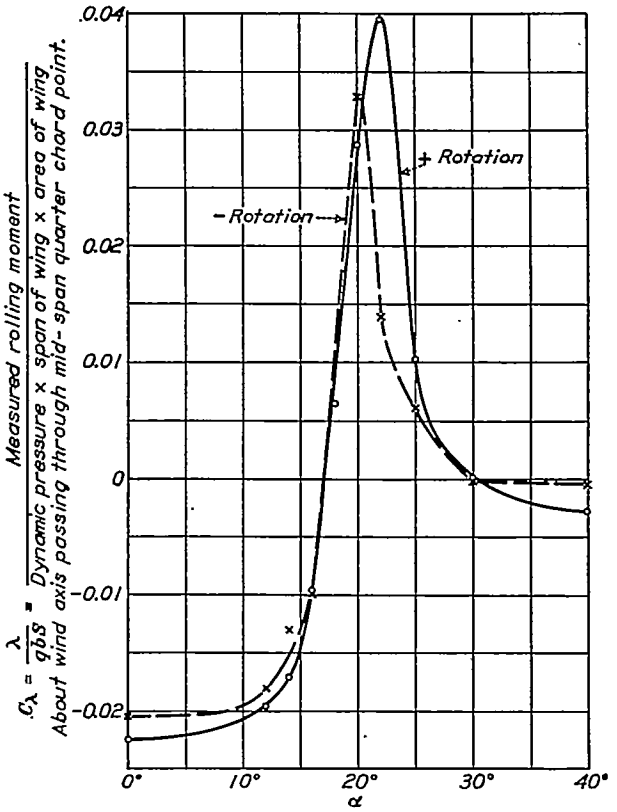

FIGURE 10.—The variation of rolling moment due to roll with angle of attack at a rate of rotation $\frac{pb}{2V}$=0.05; 7 by 10 foot wind tunnel, rotation test, 10 by 60 inch rectangular Clark Y airfoil, yaw=0°

CONCLUSION

Eight months of operation of the tunnel and associated apparatus have demonstrated that test results may be accurately and rapidly obtained with a small personnel.

LANGLEY MEMORIAL AERONAUTICAL LABORATORY,
NATIONAL ADVISORY COMMITTEE FOR AERONAUTICS,
LANGLEY FIELD, VA., *October 22, 1931.*

REFERENCES

1. Reid, Elliott G.: Standardization Tests of N. A. C. A. No. 1 Wind Tunnel. T. R. No. 195, N. A. C. A., 1924.
2. Wenzinger, Carl J., and Harris, Thomas A.: The Vertical Wind Tunnel of the National Advisory Committee for Aeronautics. T. R. No. 387, N. A. C. A., 1931.
3. Jacobs, Eastman N.: Investigation of Air Flow in Open-Throat Wind Tunnels. T. R. No. 322, N. A. C. A., 1929.
4. Knight, Montgomery, and Harris, Thomas A.: Experimental Determination of Jet Boundary Corrections for Airfoil Tests in Four Open Wind Tunnel Jets of Different Shapes. T. R. No. 361, N. A. C. A., 1930.